BEST ROOF HATCHES

AcousticMAX™ *(STC 48/STC 50)*

SMOKE VENT

Block the intrusion of exterior environmental noise with Babcock-Davis' AcousticMAX Smoke Vent. Perfect for theaters and performing arts centers; every detail is designed with precision.

FEATURES

SUPERIOR THERMAL PERFORMANCE The BSVY AcousticMAX R-14 energy-efficient smoke vent is designed to save money with reduced heat loss.

INNOVATIVE SOUND CONTROL Designed to keep out unwanted noises ensuring acoustical integrity when all you want to hear is the performance.

PREFINISHED BLACK INTERIOR Eliminate field painting hassle with the prefinished interior that seamlessly integrates into the ceiling.

STC 48 OITC 36 | STC 50 OITC 39 | FM APPROVED | c UL us LISTED

DETAILS

SOUND RATING(S) Independent third party tested to ASTM E90 and ASTM E1332
- BSVX: STC 48 - OITC 36
- BSVY: STC 50 - OITC 39

MATERIAL 14 gauge galvanneal steel; powder coat

FINISH High Reflectance White exterior cover with black interior liner and black curb

COVER Metal with liner, withstands a live load of 40psf with a max deflection of 1/150 the span

CURB Double wall curb with EZ tab counterflash and mounting flange

INSULATION Mineral wool and sound mat in cover and curb
- BSVX: Total R-10
- BSVY: Total R-14

GASKET Extruded EPDM adhesive backed gasket seals

HINGE Stainless steel heavy duty pintle hinge

SPRING Gas spring with damper opens cover against 10psf snow load

HOLD OPEN ARM Zinc plated steel automatic hold open arm locks cover in open position

LATCH Zinc plated steel rotary latch designed to hold covers closed against 90psf wind uplift

OPERATION Opens automatically with a fusible link and manual pull handles

CERTIFICATIONS UL 793 Listed, FM 4430 Approved, and IBC1207 Compliant (BSVY only)

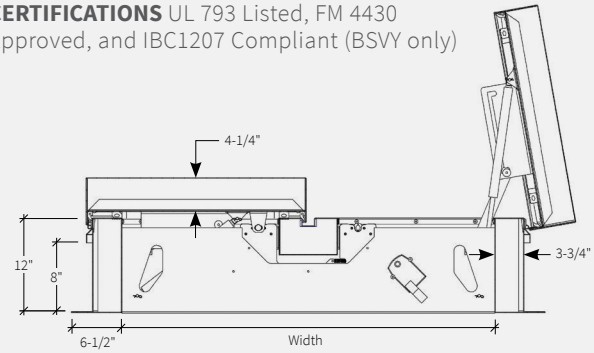

ORDER GUIDE

BASE	RATING	MATERIAL	WIDTH	X	LENGTH	DOOR	CURB	ELECTRIC	LINK TEMP (°F)	CLOSING	—	OPTIONS
BSV		**G**		**X**							**—**	
	X STC 48 **Y** STC 50	**G** Galvanneal Steel	**Standard Sizes** (W x L) 48" x 48" 48" x 72" 48" x 96" 60" x 60" 60" x 96" 60" x 120" 72" x 72" 72" x 96" *Additional size options also available.*			**D** Double Door **Q** Quad Door	**2** Double Wall **3** Curb Mount	**N** No Electrical **L** 24VDC/24VAC **H** 110VAC / 240VAC	**165** **350** **212** **360** **280** **450**	**R** Rooftop Close **W** Manual Winch **A** Linear Actuator* **Voids UL*		**SFM** FM Labeled **OP1** Door Position Sensor **B__** Burglar Bars

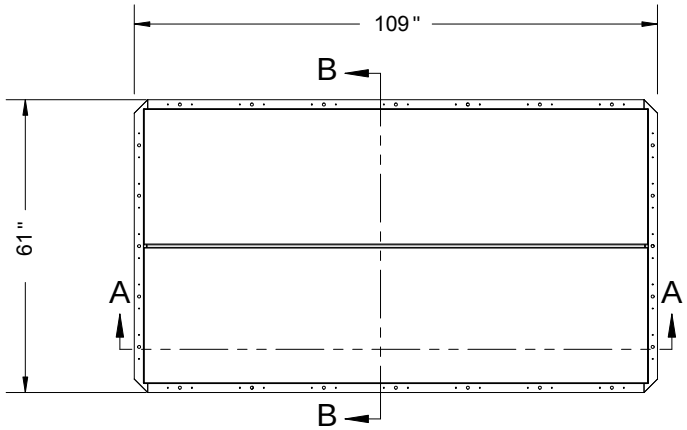

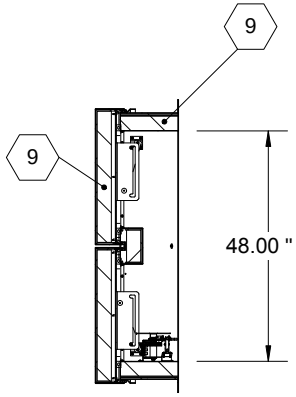

SECTION B-B

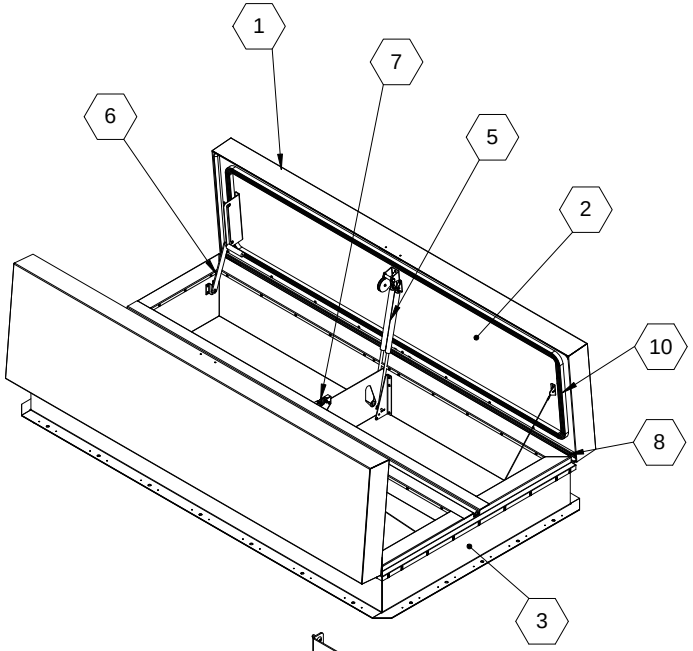

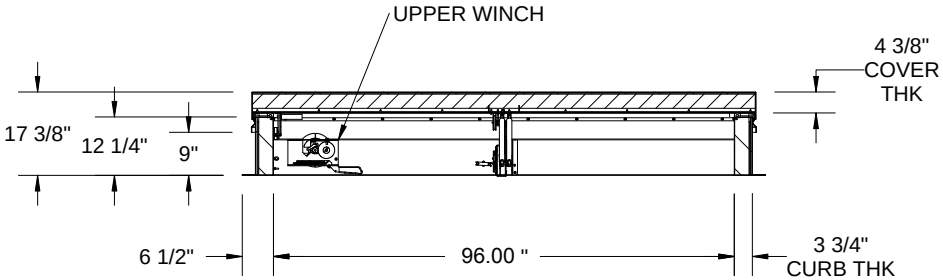

SECTION A-A

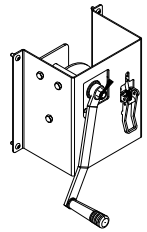

LOWER WINCH

SPECIFICATIONS:

1 **COVER:** 14 GAUGE GALVANNEAL COVER STIFFENED TO WITHSTAND A LIVE LOAD OF 40 PSF WITH A MAX DEFLECTION OF 1/150 OF THE SPAN

2 **LINER:** 14 GAUGE GALVANNEAL

3 **CURB AND COUNTERFLASH W/ EZ TAB:** DBL WALL CURB, 14 GAUGE GALVANNEAL

4 **FINISH: COVER -** POWDER COAT, HIGH REFLECT WHITE, BLACK INTERIOR
CURB - POWDER COAT, BLACK

5 **GAS SPRING WITH DAMPER:** DESIGNED TO OPEN AGAINST A 10PSF SNOW LOAD IN NOT LESS THAN 2 SECONDS

6 **HOLD OPEN ARM:** LOCKS COVER IN FULLY OPEN POSITION - ZINC PLATED STEEL

7 **LATCH**: ZINC PLATED ROTARY LATCH ASSEMBLY DESIGNED TO HOLD COVERS CLOSED AGAINST 90 PSF WIND UPLIFT ZINC PLATED STEEL LATCH STRIKERS ON COVERS

8 **HINGES:** 304 STAINLESS STEEL BUTT HINGE WITH 1/4" PIN

9 **INSULATION**: MINERAL WOOL W/ SOUND MAT, R-VALUE 14

10 **GASKETS:** ADHESIVE BACKED EPDM RUBBER EXTRUSION ON CURB AND COVER

11 **THERMAL RELEASE MECHANISM:** VENT COVERS OPEN THERMALLY BY HEAT AT FUSIBLE LINK TEMPERATURE 165 °F

12 **MANUAL OPERATION:** VENT COVERS OPEN WITH EXTERNAL MANUAL PULL HANDLE, 1/16" DIA SST CABLE AND VENT COVERS OPEN AND CLOSE WITH MANUAL WINCH, 100FT 1/8" DIA CABLE

13 **ELECTRICAL RELEASE:** NONE

14 **BURGLAR BARS:** NONE

15 **SOUND RATING:** STC50 PER ASTME90, OITC 39 PER ASTME1332

SMOKE VENT SIZE 48 "(WIDTH) x 96 "(LENGTH)

C UL US
LISTED
UL793

PROJECT:					
ARCHITECT:					
CONTRACTOR:					
QTY:					
PART#:				BSVYG48X96D2N165W	
BEST ROOF HATCHES — For more information, contact us at info@bestroofhatches.com or call us at 1-800-431-8651				TITLE: Smoke Vent, Acoustical STC50, 48x96, Double Door, Galv Steel, Black Pwd, Wht Pwd Cvr Ext, Dbl Wall Curb	
	NAME	DATE	SIZE	DWG. NO. BSVYG48X96D2N165W	REV A
DRAWN	ELW	4/15/14	A		
RELEASED	ELW	4/15/14	WEIGHT: VARIES		SHEET 1 OF 2

PROPRIETARY AND CONFIDENTIAL: THE INFORMATION CONTAINED IN THIS DRAWING IS THE SOLE PROPERTY OF BABCOCK-DAVIS. ANY REPRODUCTION IN PART OR AS A WHOLE WITHOUT THE WRITTEN PERMISSION OF BABCOCK-DAVIS IS PROHIBITED.

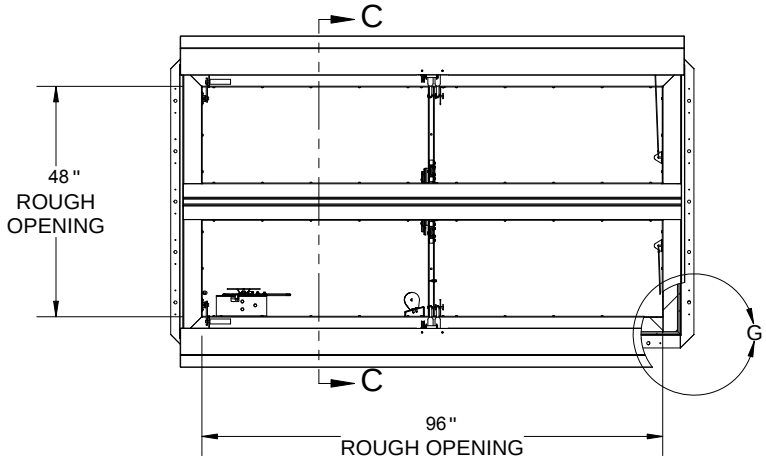

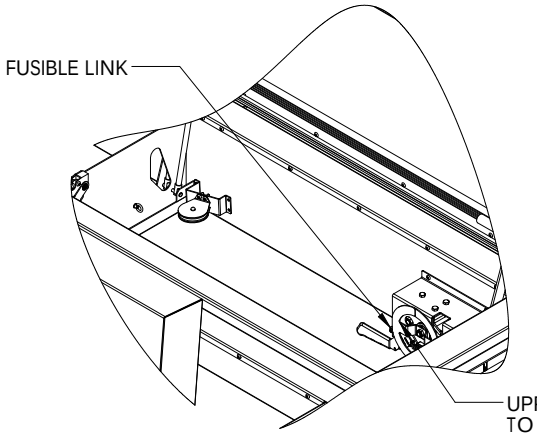

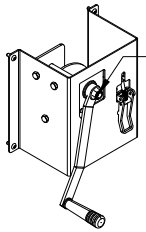

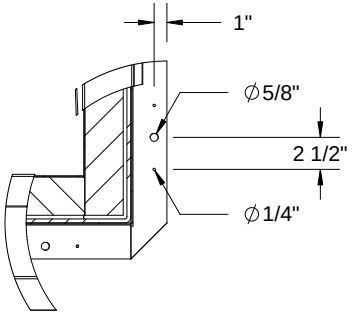

DETAIL G
SCALE 1 : 15

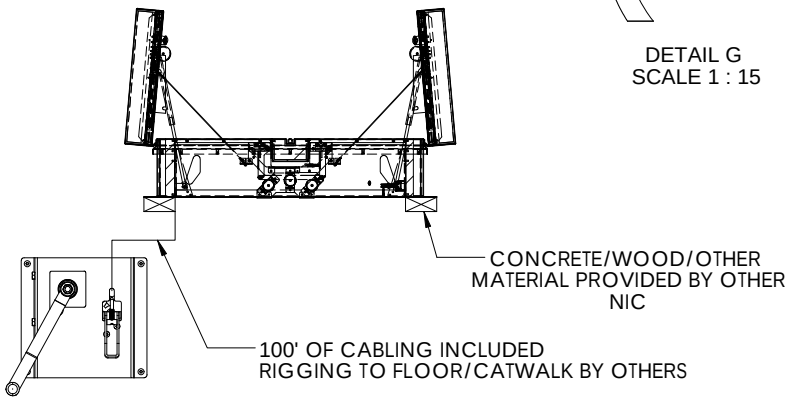

SECTION C-C

SMOKE VENT COVER OPENS WHEN ACTIVATED BY:

A. THERMAL RELEASE MECHANISM: RELEASED BY HEAT WITH A UL LISTED FUSIBLE LINK AT TEMPERATURE 165°F. RESET AT ROOF LEVEL UPPER WINCH.

B. MANUAL OPENING:
ROOF LEVEL- RELEASED BY EXTERNAL PULL CABLE. RESET AT ROOF LEVEL UPPER WINCH.
FLOOR LEVEL- RELEASED BY INTERNAL PULL CABLE (UNLATCHES VENT) THEN UNWIND MANUAL WINCH.

SMOKE VENT COVERS CLOSE MANUALLY WITH MANUAL WINCH
1. MOVE LEVER TO DOWNWARD POSITION
2. WIND THE MANUAL WINCH TILL THE VENT LATCHES ENGAGE
3. RETURN THE LEVER TO THE UPWARD POSITION

BEST ROOF HATCHES
For more information, contact us at info@bestroofhatches.com or call us at 1-800-431-8651

TITLE: Smoke Vent, Acoustical STC50, 48x96, Double Door, Galv Steel, Black Pwd, Wht Pwd Cvr Ext, Dbl Wall Curb

	NAME	DATE	SIZE	DWG. NO.	REV
DRAWN	ELW	4/15/14	A	BSVYG48X96D2N165W	A
RELEASED	ELW	4/15/14	WEIGHT: VARIES		SHEET 2 OF 2

PROPRIETARY AND CONFIDENTIAL: THE INFORMATION CONTAINED IN THIS DRAWING IS THE SOLE PROPERTY OF BABCOCK-DAVIS. ANY REPRODUCTION IN PART OR AS A WHOLE WITHOUT THE WRITTEN PERMISSION OF BABCOCK-DAVIS IS PROHIBITED.